# EXHAUST FAN SCHEDULE

| SYM. | TYPE | C.F.M. | S.P.E. | WATTS | CHAR. | R.P.M. | CONTROL | REMARKS |
|---|---|---|---|---|---|---|---|---|
| EF 1 | CEILING MOUNTED | 100 | 0.25 | 87 | 120/60/1 | 750 | SWITCH SEE ELECT. | BROAN LOSONE SELECT MODEL L100 WITH BACKDRAFT DAMPER. 10x4 EXHAUST DUCT TO ROOF CAP |
| EF 2 | CEILING MOUNTED | 100 | 0.25 | 87 | 120/60/1 | 750 | OCC. SENSOR | BROAN LOSONE SELECT MODEL L100 WITH BACKDRAFT DAMPER. 10x4 EXHAUST DUCT TO ROOF CAP |

# GRILLE AND REGISTER SCHEDULE

| SYM. | TYPE | SIZE | CFM RANGE | THROW PATTERN | CONSTR. | FINISH | BALANCING DAMPER | FIRE DAMPER | REMARKS |
|---|---|---|---|---|---|---|---|---|---|
| D-1 CFM | CEILING | 6x6 | 50-110 | | STEEL | WHITE | NA | NA | PRICE MODEL SMD WITH BEVELED FRAME |
| D-2 CFM | CEILING | 9x9 | 150-285 | | STEEL | WHITE | NA | NA | PRICE MODEL SMD IN 24x24 LAY-IN MODULE |
| SR-1 CFM | HIGH SIDEWALL | 12x10 | 110-280 | NA | STEEL | WHITE | YES | NA | PRICE MODEL SDGE ROUND DUCT REGISTER |
| SR-2 CFM | HIGH SIDEWALL | 12x10 | 110-280 | NA | STEEL | WHITE | YES | NA | PRICE MODEL 520D CONTR. TO PROVIDE TRANSITION |
| R-1 | CEILING | 20x20 | 750-1200 | NA | STEEL | WHITE | NA | NA | PRICE MODEL 535 |

| DIMENSION OF LONGEST SIDE, INCHES | SHEET METAL GAGE (ALL FOUR SIDES) | TRANSVERSE REINFORCING (1) | | |
|---|---|---|---|---|
| | | MINIMUM REINFORCING ANGLE SIZE AND MAXIMUM LONGITUDINAL SPACING BETWEEN TRANSVERSE JOINTS &/OR INTERMEDIATE REINFORCING | AT JOINTS | |
| | | | DRIVE SLIP | HEMMED S SLIP |
| | | | RECOM-MENDED GAGE | RECOM-MENDED GAGE |
| UP THRU 12 | 26 | NONE REQUIRED | 26 | 26 |
| 13 - 18 | 24 | NONE REQUIRED | 24 | 24 |
| 19 - 30 | 24 | 1"x1"x1/8" @ 60 IN | - | 24 |

(1) TRANSVERSE REINFORCING SIZE IS DETERMINED BY DIMENSION OF SIDE TO WHICH ANGLE IS APPLIED.

METAL FASTENERS - OMARK INSULPINS, DURO DYNE FASTENERS OR GRIPNAILS.

GRIP NAILS SHALL BE INSTALLED BY GRIPNAIL AIR HAMMER OR BY AUTOMATIC FASTENER EQUIP.

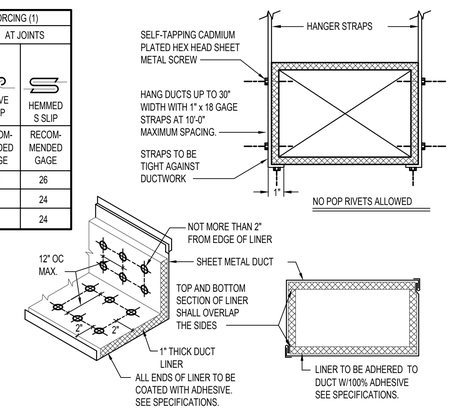


## DUCT CONSTRUCTION AND HANGER DETAIL

NO SCALE

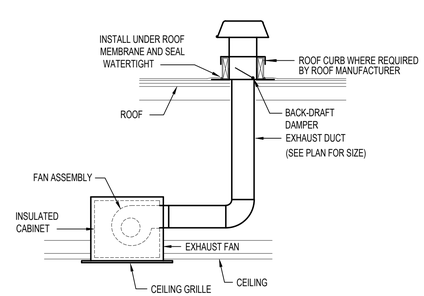


## CEILING MOUNTED EXHAUST FAN DETAIL

NO SCALE

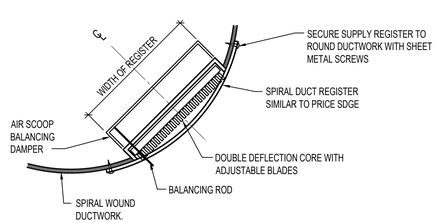


## REGISTER INSTALLATION DETAIL

NO SCALE

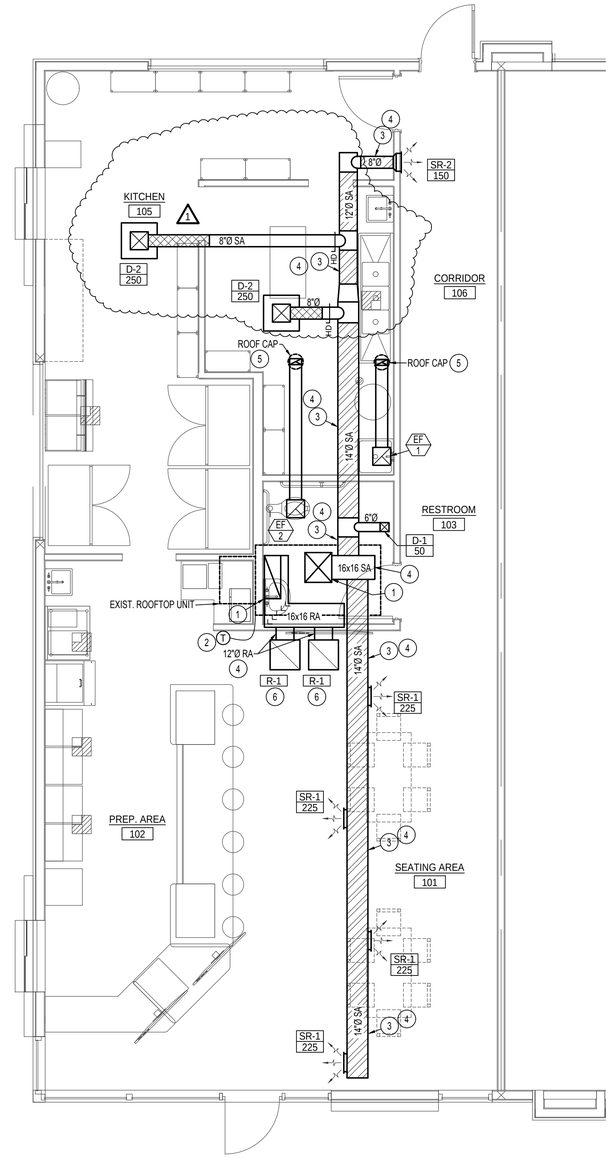


## MECHANICAL FLOOR PLAN

SCALE: 1/4" = 1'-0"

North

# PLAN NOTES:

1. CONNECT NEW SUPPLY AND RETURN AIR DUCTWORK TO EXISTING ROOFTOP UNIT DUCTWORK AT LOCATION SHOWN.
2. RELOCATE EXISTING PROGRAMMABLE THERMOSTAT TO NEW LOCATION AS SHOWN. EXTEND WIRING AS REQUIRED.
3. RUN NEW EXPOSED SPIRAL DUCTWORK AS HIGH AS POSSIBLE. COORDINATE FINAL LOCATION WITH LIGHTS AND OTHER EQUIPMENT TO AVOID CONFLICT.
4. ALL EXPOSED DUCTWORK TO BE PAINTLOK SHEET METAL FOR FIELD PAINTING BY DIVISION 09.
5. CONTRACTOR TO CUT & PATCH EXISTING ROOF FOR NEW ROOF PENETRATION. ROOF PATCHING TO BE DONE BY ORIGINAL ROOFING CONTRACTOR TO MAINTAIN WARRANTY.
6. INSTALL RETURN AIR GRILLE AT 12'-0" A.F.F. CONTRACTOR TO PROVIDE DUCT TRANSITION AS REQUIRED.

# MECHANICAL LEGEND

| SYMBOL | DESCRIPTION |
|---|---|
| T | ELECTRONIC THERMOSTAT |
| FC 1 | EQUIPMENT SYMBOL |
| HD | HAND DAMPER |
| | ROUND BRANCH DUCT WITH HAND DAMPER |
| | RECTANGULAR SUPPLY AND RETURN AIR DUCT TAKE-OFF |
| | TURNING VANES |
| | DUCT TRANSITION |
| | SPIRAL WOUND DUCTWORK |
| | RETURN AIR OR EXHAUST GRILLE |
| | CEILING DIFFUSER |
| | CEILING MOUNTED EXHAUST FAN |

REGISTERED PROFESSIONAL ENGINEER
No. 322307
BRADLEY C. SUDWEEKS
NOV. 4, 2020
STATE OF UTAH


Engineered Systems Associates
1355 EAST CENTER
POCATELLO, IDAHO 83201
PHONE: (208) 233-0501
FAX: (208) 233-0529
EMAIL: esa@engsystems.com
ESA JOB NUMBER: 20074


MOUNTAIN WEST ARCHITECTURE

SEAL:

| REV | DATE | DESCRIPTION |
|---|---|---|
| 1 | 11-4-20 | HEALTH DEPT. COMMENTS |

PROJECT:

New Tenant Improvement For:

**FiiZ Drinks**

1077 West 12TH South Street
MARRIOTT-SLATERVILLE,UT 84404


MOUNTAIN WEST ARCHITECTURE | 543 25TH STREET - OGDEN, UT 84401 | PH: 801-388-9052 | www.mountainwestarchitecture.com


SHEET TITLE:

**MECHANICAL FLOOR PLAN**

PROJECT:

SHEET NUMBER:

**M101**

DO NOT SCALE DRAWING